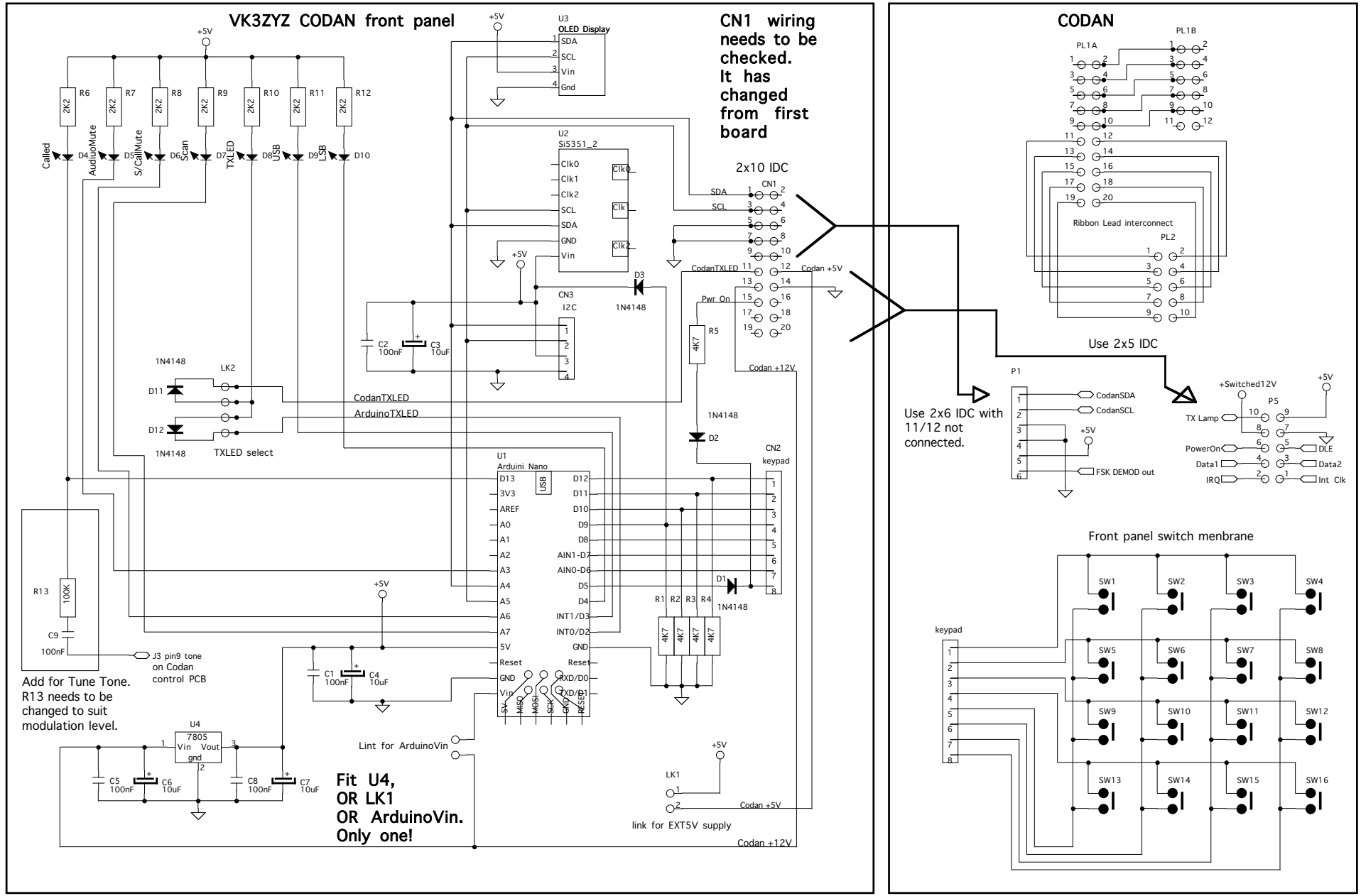

Called
AudioMute
S/CallMute
Scan
TXLED
USB
LSB

Coodenco ?

DESIGNED
DRAWN
UNIT Codan8525B_VFO3.SHX
DATE
Sheet 1 of

COPYRIGHT (C) coodenco.com Mooroopna, VIC. AUSTRALIA